metalrota

Via Bulgaria, 46 – 41122 Modena (MO) – Italy
Tel. +39 059 315204 Fax. +39 059 450439
E-mail: info@metalrota.it
Web site: www.metalrota.it

Company Name: Country:

E-mail: Telephone:

Main contact:

TRANSAXLES APPLICATION FORM

Describe the vehicle type (towing tractor, passenger veichle, platform, dumper, scrubber, AGV, etc…):

Transaxles: ☐ **Front** ☐ **Rear** ☐ **Four wheel traction**

	Vehicle only	**Vehicle and Load**
Vehicle weight [kg]:		
Max load on transaxle [kg]:		
Max climbing slope [%]:		
Max speed on flat [km/h]:		
Max speed on slope [km/h]:		
Acceleration [m/s^2]:		
Duty cycle:	Number of shifts [1, 2, 3]: _____	Service [%]: _____
	Service time [min]: _____	Resting time [min]: _____

Wheel diameter [mm]: Width [mm]: Floor type:

Traction motor: ☐ AC ☐ DC ☐ PMAC Voltage:

Integrated sensor if PMAC: ☐ Sin/Cos ☐ Incremental encoder + Hall cells ☐ Resolver

Ambient temperature: Min _____ °C Max _____ °C Humidity level [%]:

E/m brake voltage: E/m brake release lever: ☐ Yes ☐ No

Thermal sensor: ☐ Yes ☐ No Environment and required IP:

[A] - Bracket connection distance (mm): [B] - Roadway (mm):

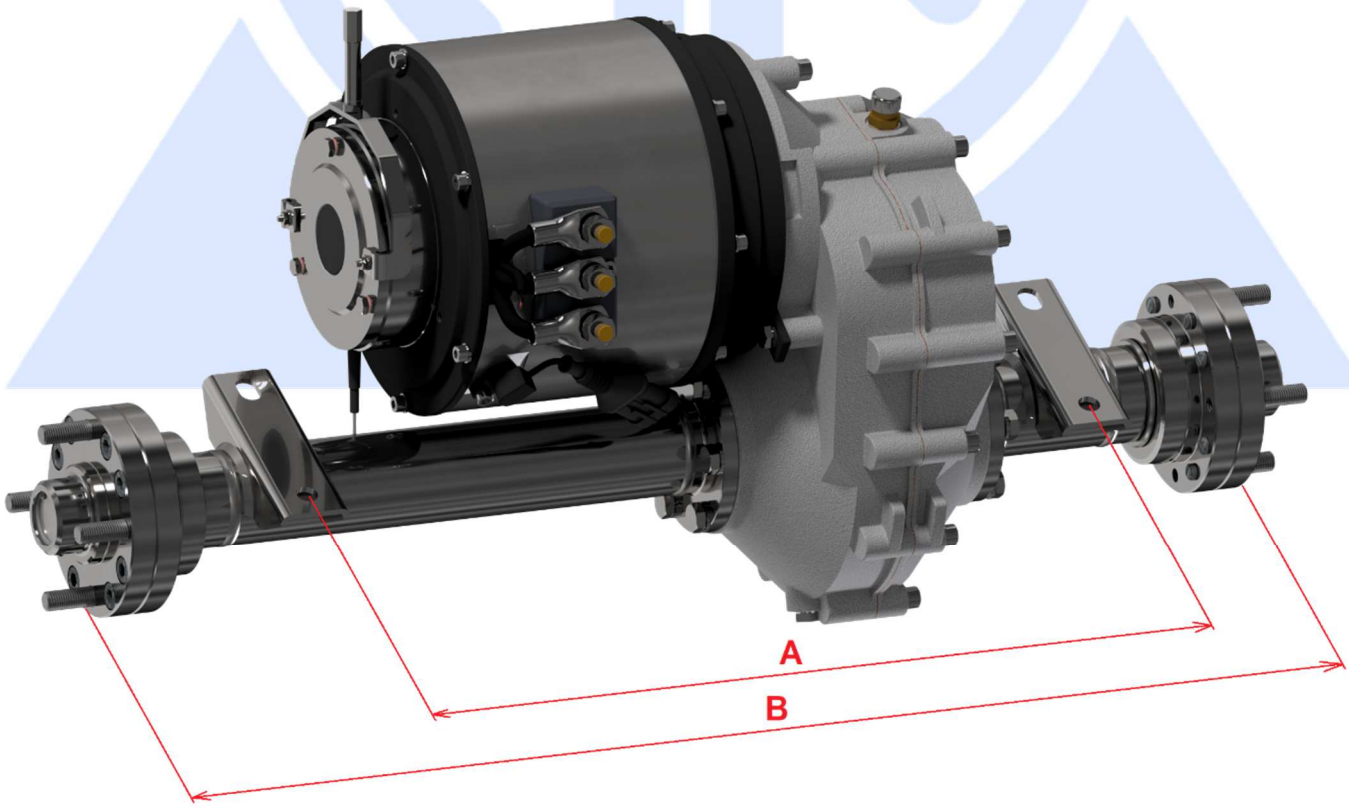

metalrota

Via Bulgaria, 46 – 41122 Modena (MO) – Italy
Tel. +39 059 315204 Fax. +39 059 450439
E-mail: info@metalrota.it
Web site: www.metalrota.it

Wheel hub type:

☐ **Wheel brakes**

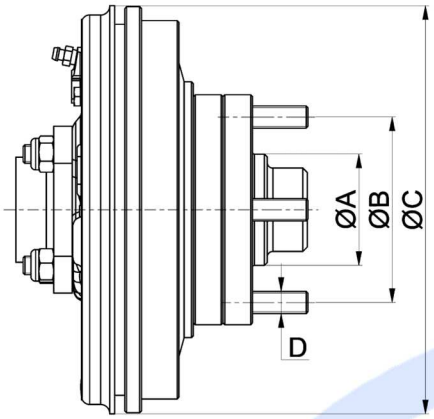

	Ø124x25	Ø160x40	Ø185x30	SPECIAL
A	62	58	58	
B	95	98	98	
C	156	183	219	
D	M12x1.5 N°4 at 90°			

☐ **With studs**

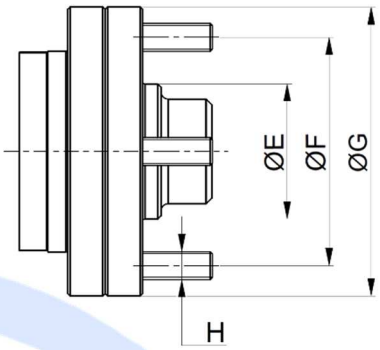

	BALILLA	BMW	FIAT	VESPA 4	SPECIAL
E	62	60	58	52	
F	95	100	98	70	
G	124	124	124	93	
H	M12x1.5 N°4 at 90°			M10x1.5 N°4-90°	

Plan:

☐ Prototype Q.ty: _____ ☐ Series Q.ty: _____ / year

Any other information about the project: